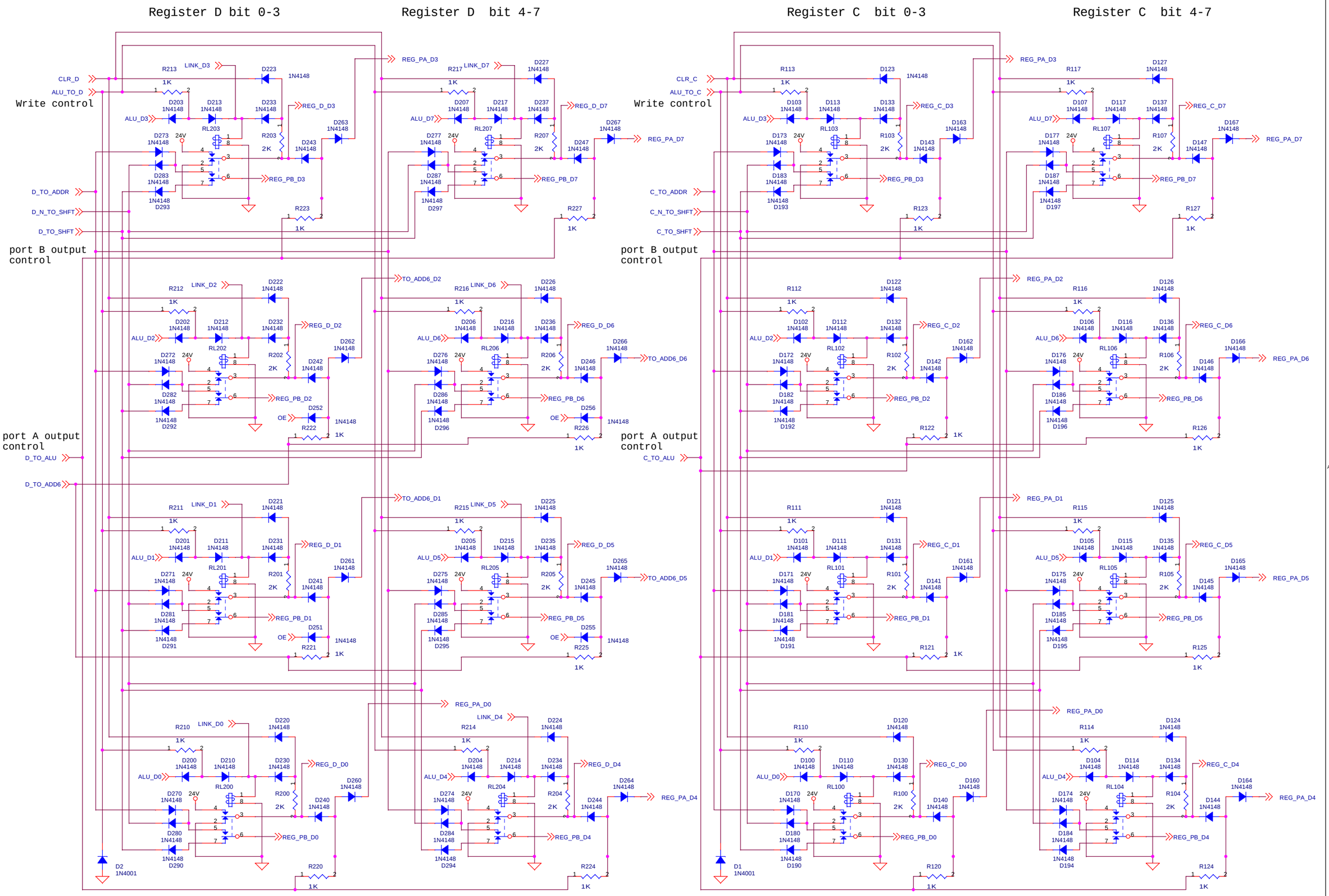

Register C can not be routed to ADD6 block so can not be destination of decimal ADD

RISC Relay CPU

REG1710 REGISTERS

20170312

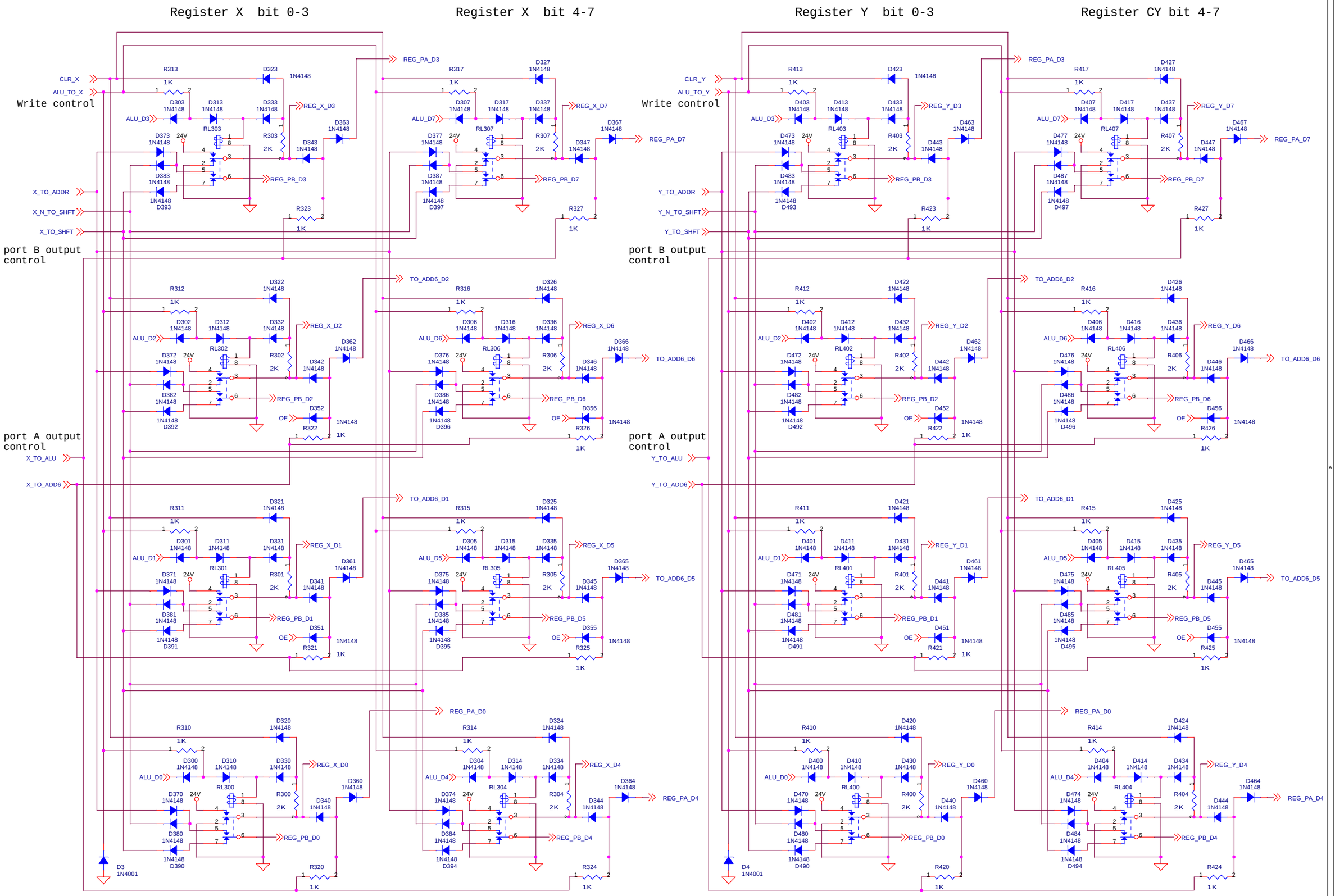

RISC Relay CPU

REG1710 REGISTERS

20170312

LINK_D7
LINK_D6
LINK_D5
LINK_D4
LINK_D3
LINK_D2
LINK_D1
LINK_D0

LINK inputs used
instead of
REG_CH_Dn

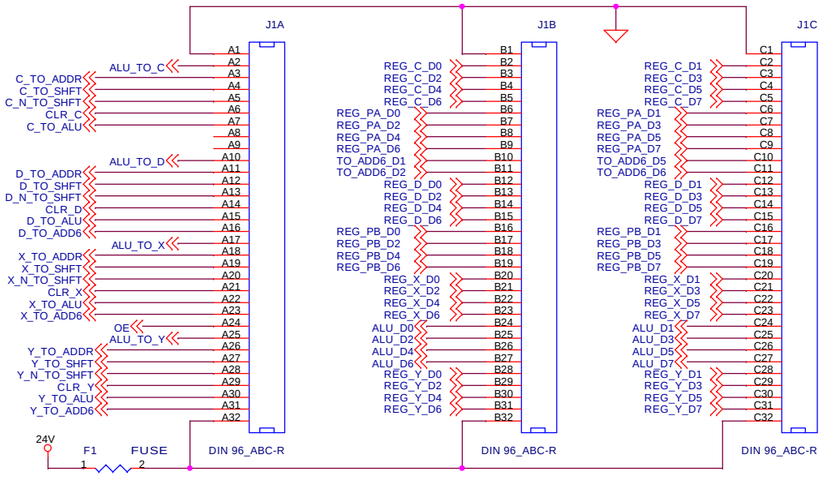

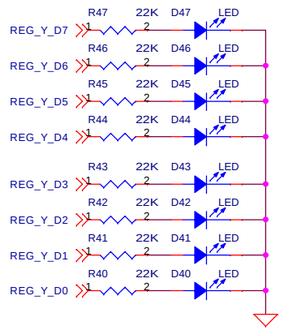

Register Y

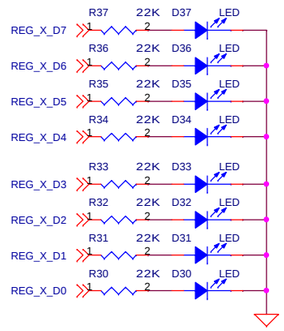

Register X

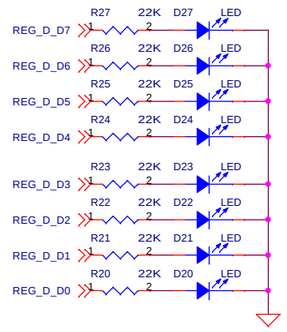

Register D

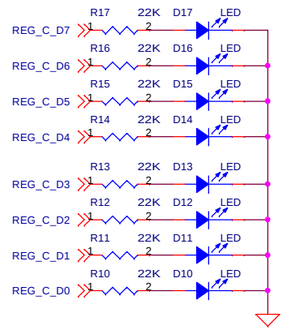

Register C

All LEDs :

KPTD-3216 SRC-PRV
Red, 300 mcd, Super bright, 1206

RISC Relay CPU
REG1710 REGISTERS
20170312