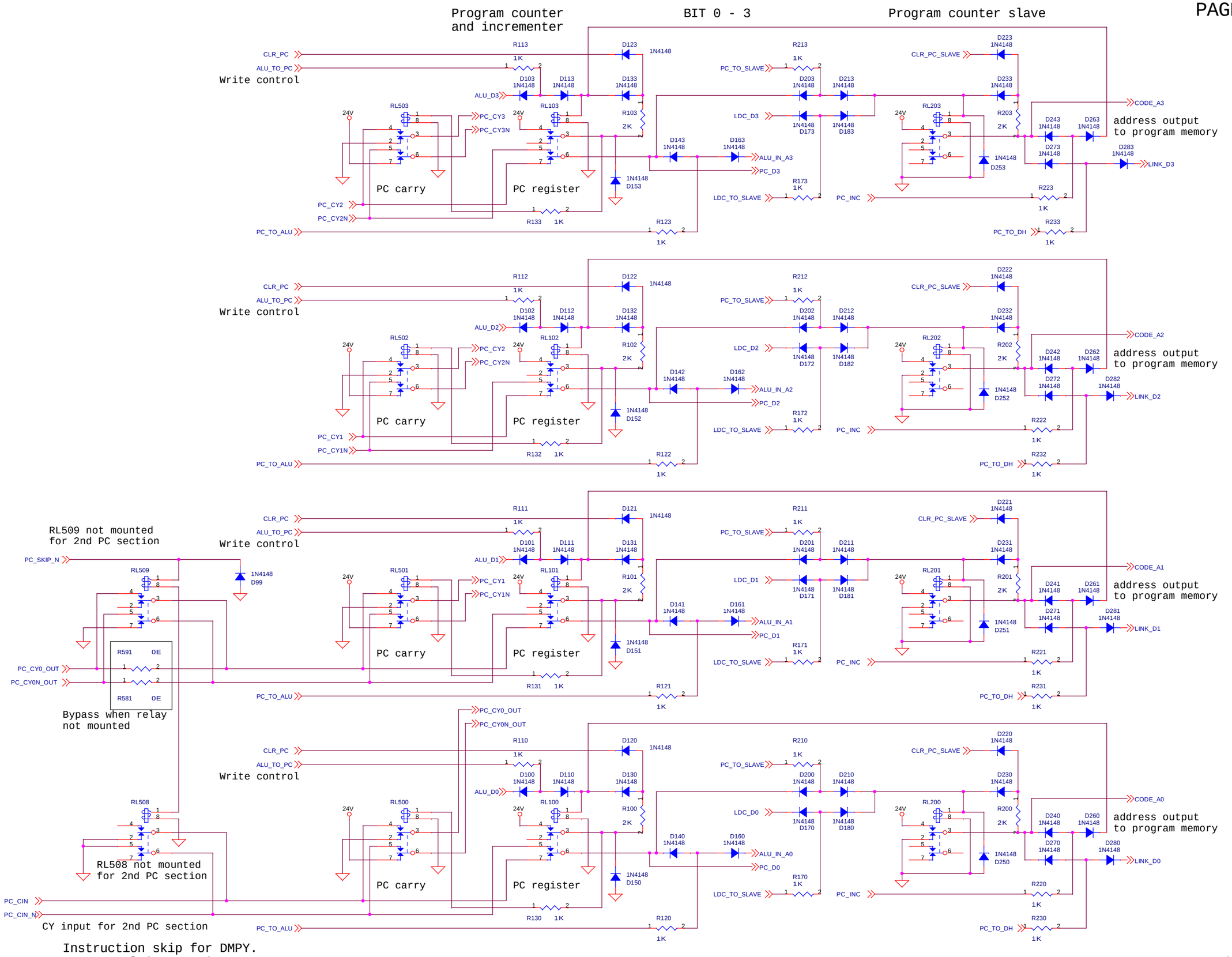

Instruction skip for DMPY.
For normal instructions,
relays are activated

RISC Relay CPU
PC1750

Program counter
and incrementer

BIT 4 - 5

Program counter slave

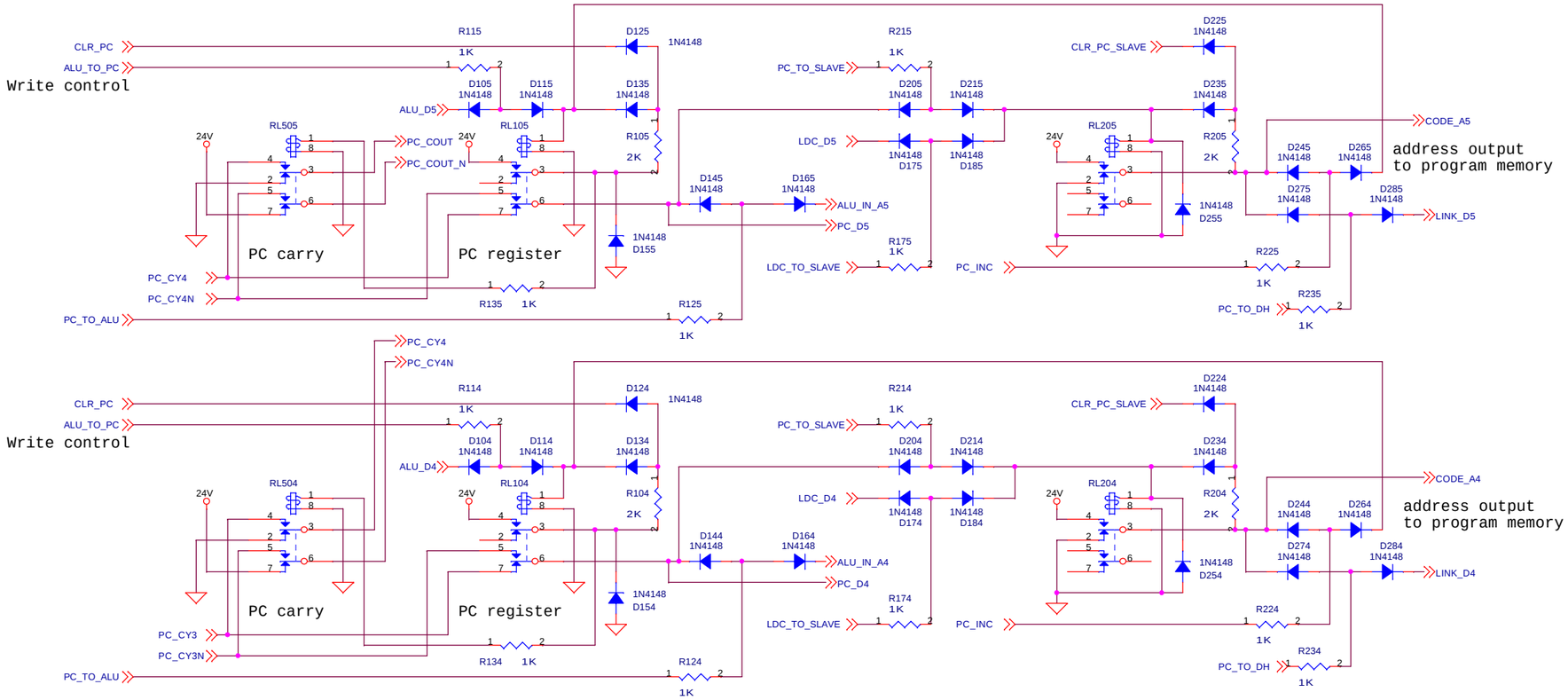

RISC Relay CPU

PC1750

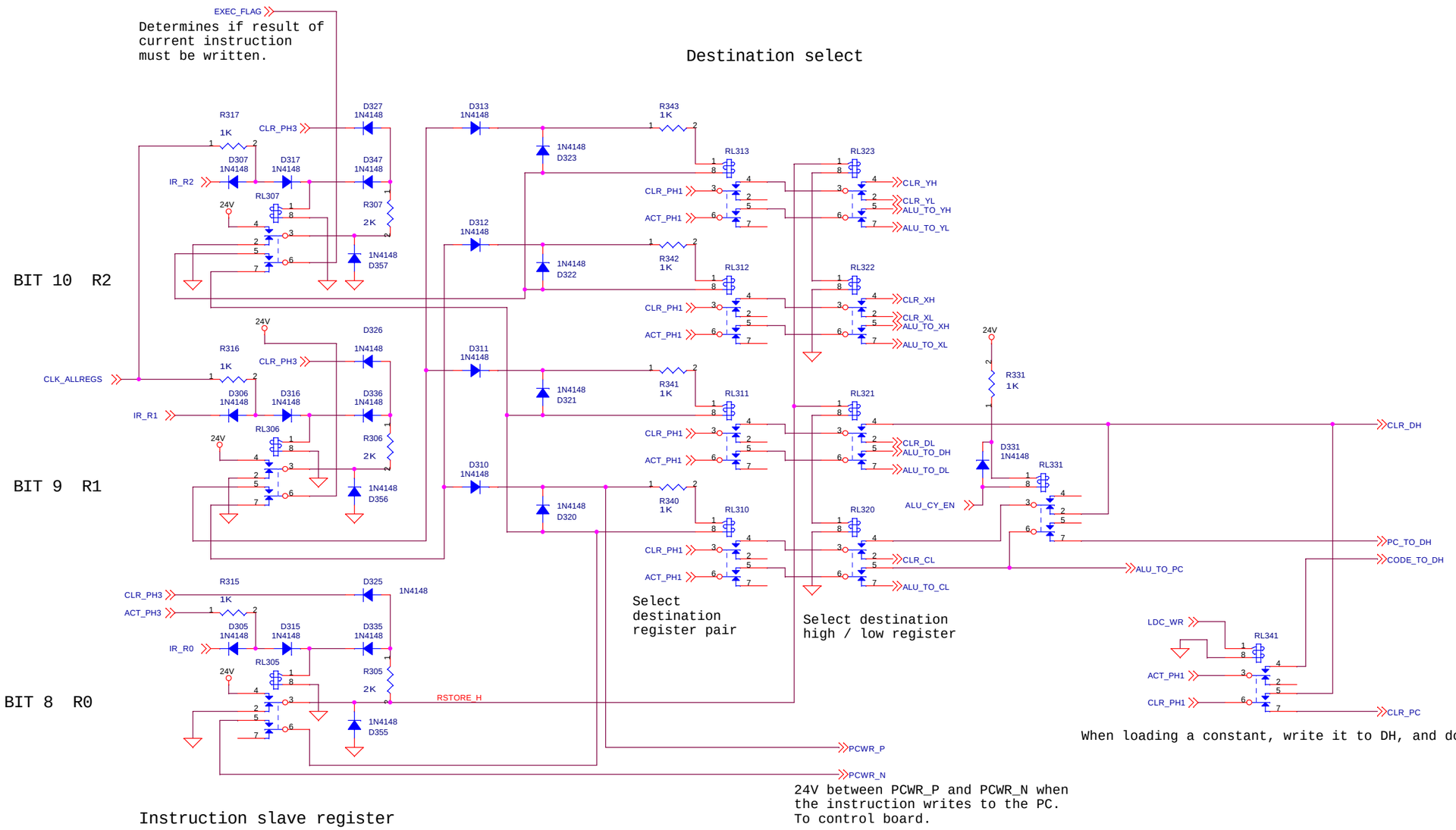

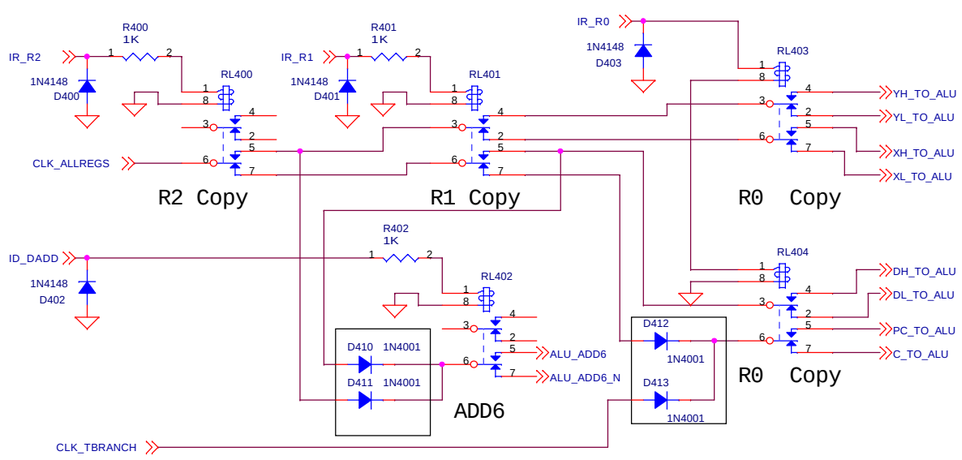

Register selection

RISC Relay CPU

PC1750

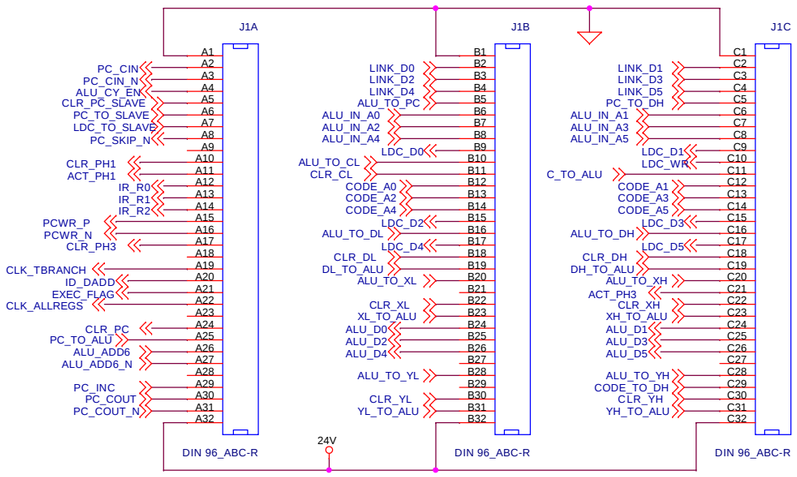

PC / DECODER CONNECTOR

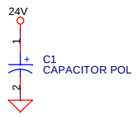

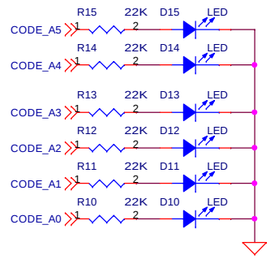

Register PC

RISC Relay CPU

PC1750